McElroy Manufacturing, Inc. The leader by design. Tulsa, Oklahoma U.S.A.	DRAWN: BWW	CHECK: SWB	APPRV'D: SWB	DATE: 10/24/05	SHT No: 1	REV No: A	PART No: ASW00120
	1500psi COMPACT CHAIN CLAMP SideWinder™ ASSEMBLY						

NOTE: THIS DRAWING AND THE INFORMATION CONTAINED THEREIN IS THE CONFIDENTIAL AND PROPRIETARY PROPERTY OF McElroy Manufacturing, Inc. THE DRAWING IS NOT TO BE REPRODUCED IN ANY MANNER, SUBMITTED TO OUTSIDE PARTIES FOR EXAMINATION, OR USED DIRECTLY OR INDIRECTLY FOR THE PURPOSES OTHER THAN THOSE FOR WHICH IT WAS FURNISHED WITHOUT WRITTEN PERMISSION OF McElroy Manufacturing, Inc.

NOTES:

1. FOR REPLACEMENT GAUGE ORDER KIT ASW13103, WHICH INCLUDES GAUGE AND INSTRUCTION SHEETS.

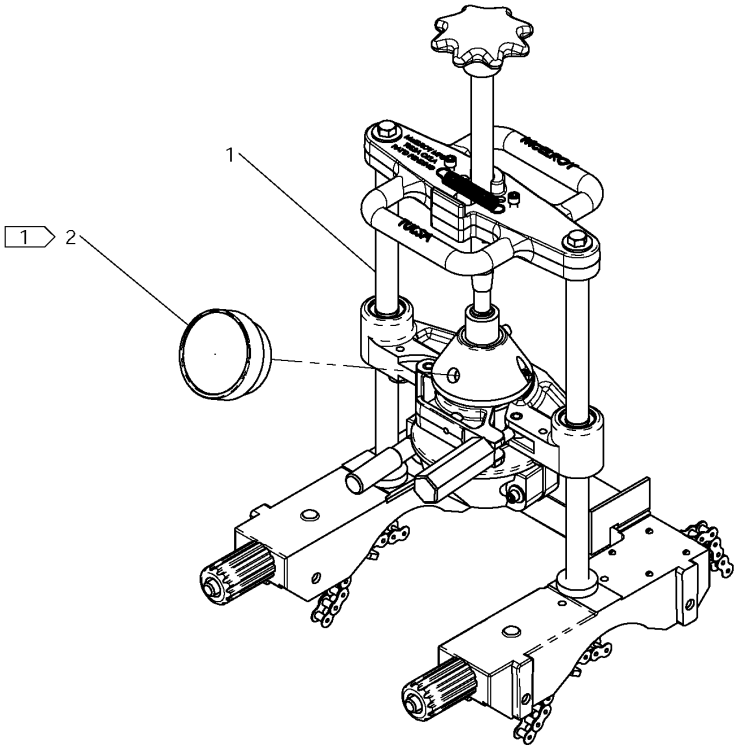

Click Here to View Item Online

McElroy Manufacturing Parts List

Part Number: ASW00120 1500psi Compact Chain Clamp Sidewinder Assembly

Part Number ASW00120 Component List

Item	Component	Description	Quantity	Unit	Price
1	ASW00124	Compact Chain Clamp Sidewinder Assembly Less Gauge	1.0	EA	2,774.00
2	MEE00011	1500PSI/BAR,1% Pressure Gauge	1.0	EA	102.00

Please visit https://fusion.mcelroy.com/parts to purchase parts or for more information.