McElroy Manufacturing, Inc.	DRAWN: BWW	CHECK: SWB	APPRV'D: SWB	DATE: 10/27/05	SHT No: 5	REV No: A	PART No: AT800105_07
The leader by design.	TracStar 28 BUTT ELECTRIC START FUSION MACHINE PACKAGE						
Tulsa, Oklahoma U.S.A.							

NOTE: THIS DRAWING AND THE INFORMATION CONTAINED THEREIN IS THE CONFIDENTIAL AND PROPRIETARY PROPERTY OF McElroy Manufacturing, Inc. THE DRAWING IS NOT TO BE REPRODUCED IN ANY MANNER, SUBMITTED TO OUTSIDE PARTIES FOR EXAMINATION, OR USED DIRECTLY OR INDIRECTLY FOR THE PURPOSES OTHER THAN THOSE FOR WHICH IT WAS FURNISHED WITHOUT WRITTEN PERMISSION OF McElroy Manufacturing, Inc.

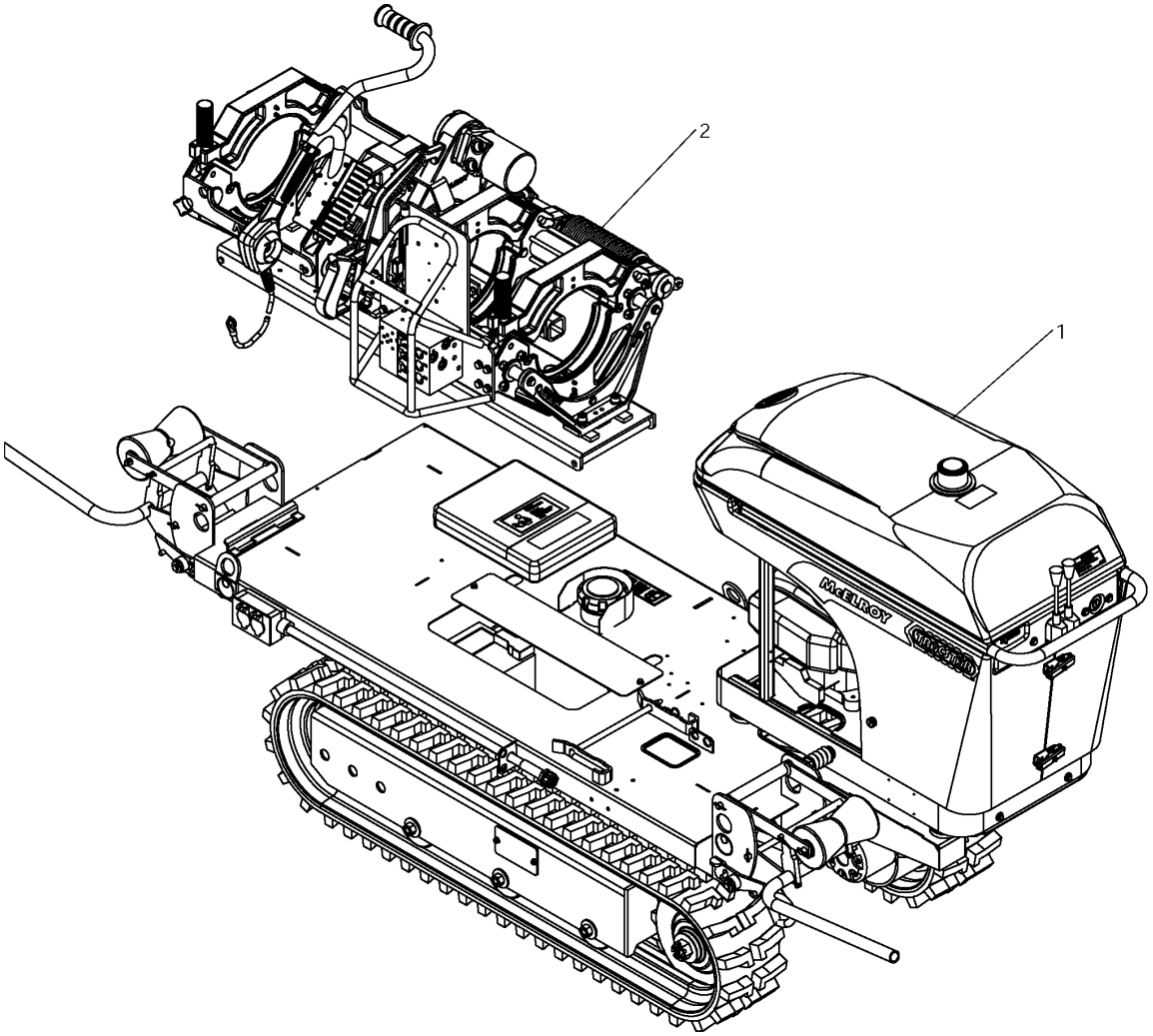

Click Here to View Item Online

McElroy Manufacturing Parts List

Part Number: AT800105 TracStar 28 HF Butt Electric Start Fusion Machine Package

Part Number AT800105 Component List

Item	Component	Description	Quantity	Unit	Price
1	AT800801	TracStar 250 / TracStar 28 Track Vehicle Package	1.0	EA	0.00
2	AT805505	PitBull 28 HF Butt 120V Fusion Machine Package	1.0	EA	19,865.00

Please visit https://fusion.mcelroy.com/parts to purchase parts or for more information.