McElroy Manufacturing, Inc.	DRAWN: DCG	CHECK: ERA	APPRV'D: BWJ	DATE: 8/25/16	SHT No: 1	REV No:	PART No: AT812102_04
The leader by design.	TracStar® 28 SERIES 2 COMBINATION FUSION MACHINE PACKAGE						
Tulsa, Oklahoma U.S.A.							

NOTE: THIS DRAWING AND THE INFORMATION CONTAINED THEREIN IS THE CONFIDENTIAL AND PROPRIETARY PROPERTY OF McElroy Manufacturing, Inc. THE DRAWING IS NOT TO BE REPRODUCED IN ANY MANNER, SUBMITTED TO OUTSIDE PARTIES FOR EXAMINATION, OR USED DIRECTLY OR INDIRECTLY FOR THE PURPOSES OTHER THAN THOSE FOR WHICH IT WAS FURNISHED WITHOUT WRITTEN PERMISSION OF McElroy Manufacturing, Inc.

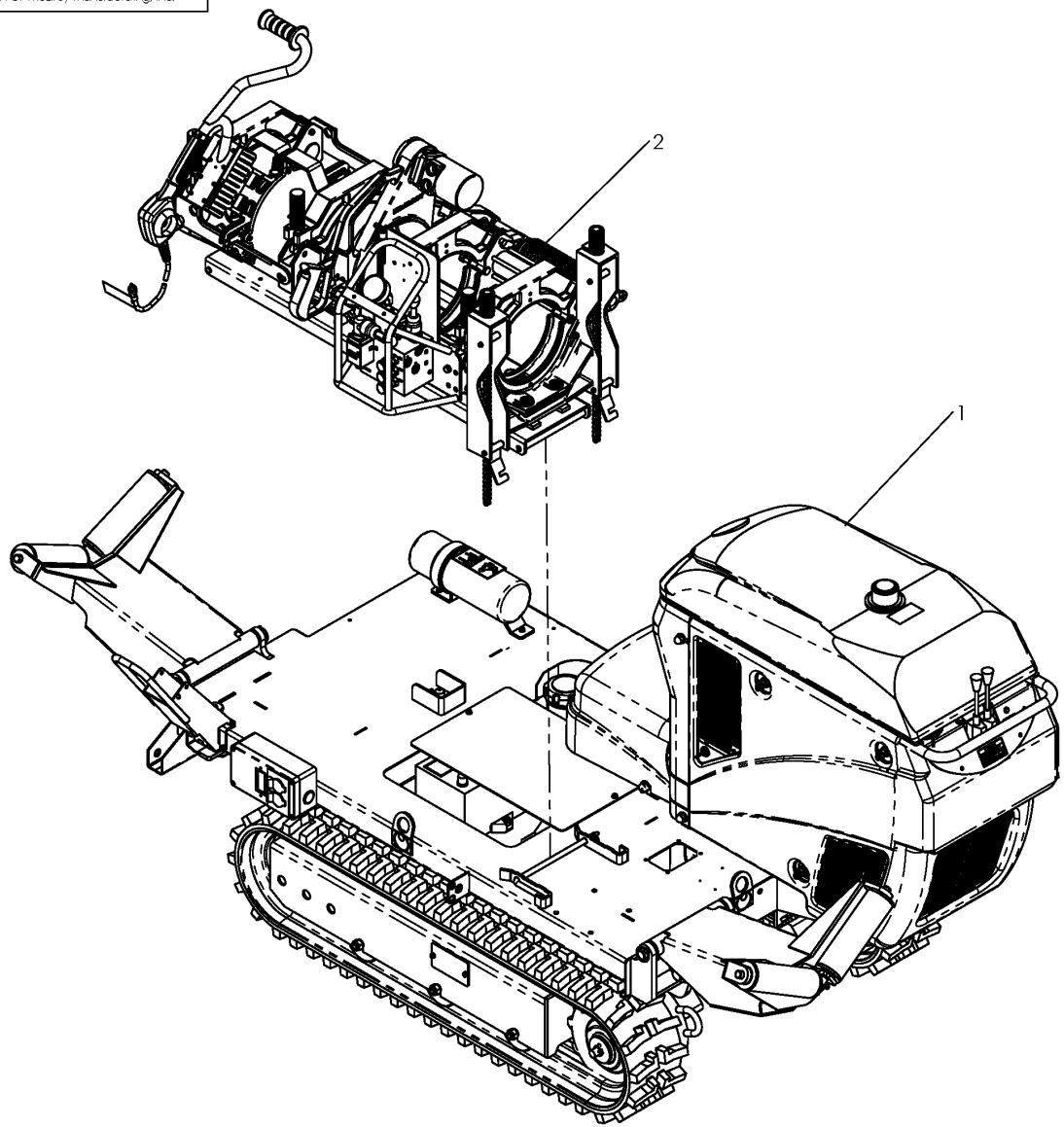

Click Here to View Item Online

McElroy Manufacturing Parts List

Part Number: AT812102 TracStar 28 Series 2 HF Combination Fusion Machine Package

Part Number AT812102 Component List

Item	Component	Description	Quantity	Unit	Price
1	AT1830101	TracStar 28/250/412/618 Series 2 Track Vehicle Package	1.0	EA	38,878.00
2	AT805506	PitBull 28 HF Combination 120V Fusion Machine Package	1.0	EA	20,449.00

Please visit https://fusion.mcelroy.com/parts to purchase parts or for more information.