McElroy Manufacturing, Inc. The leader by design. Tulsa, Oklahoma U.S.A.	DRAWN: HECK	CHECK: PJD	APPRV'D: BWJ	DATE: 3/28/17	SHT No: 1	REV No: A	PART No: A248001
	32-63mm HOT TAP TOOL PACKAGE						

NOTE: THIS DRAWING AND THE INFORMATION CONTAINED THEREIN IS THE CONFIDENTIAL AND PROPRIETARY PROPERTY OF McElroy Manufacturing, Inc. THE DRAWING IS NOT TO BE REPRODUCED IN ANY MANNER, SUBMITTED TO OUTSIDE PARTIES FOR EXAMINATION, OR USED DIRECTLY OR INDIRECTLY FOR THE PURPOSES OTHER THAN THOSE FOR WHICH IT WAS FURNISHED WITHOUT WRITTEN PERMISSION OF McElroy Manufacturing, Inc.

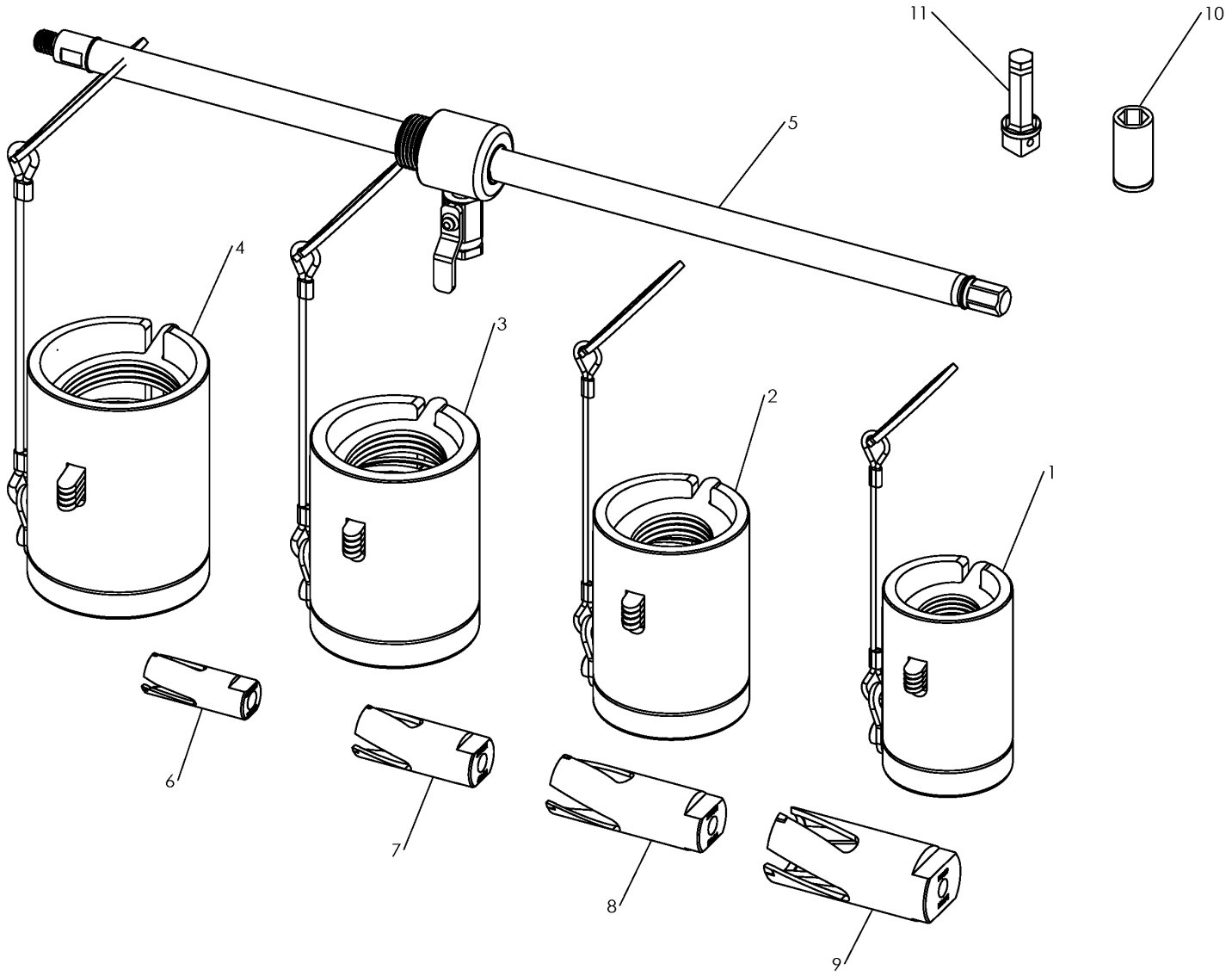

Click Here to View Item Online

McElroy Manufacturing Parts List

Part Number: A248001 32-63mm Hot Tap Tool Package

Part Number A248001 Component List

Item	Component	Description	Quantity	Unit	Price
1	248501	32mm Hot Tap Tool Housing Assembly	1.0	EA	254.00
2	248502	40mm Hot Tap Tool Housing Assembly	1.0	EA	254.00
3	248503	50mm Hot Tap Tool Housing Assembly	1.0	EA	254.00
4	248504	63mm Hot Tap Tool Housing Assembly	1.0	EA	254.00
5	248701	Hot Tap Tool Shaft Assembly	1.0	EA	634.00
6	249101	32MM Htt Toothed Cutter (Effective to 3/13/17)	1.0	EA	0.00
6	A249101	32MM Htt Tthd Cutter W/sleeve	1.0	EA	324.00
7	249201	40MM Htt Toothed Cutter (Effective to 3/13/17)	1.0	EA	0.00
7	A249201	40MM Htt Tthd Cutter W/sleeve	1.0	EA	324.00
8	249301	50MM Htt Toothed Cutter (Effective to 3/13/17)	1.0	EA	0.00
8	A249301	50MM Htt Tthd Cutter W/sleeve (Effective 3/14/17 to 2/11/19)	1.0	EA	0.00
8	A249501	50MM Ext Htt Tthd Cut W/sleeve	1.0	EA	324.00
9	249401	63MM Htt Toothed Cutter (Effective to 3/13/17)	1.0	EA	0.00
9	A249401	63MM Htt Tthd Cutter W/sleeve (Effective 3/14/17 to 2/11/19)	1.0	EA	0.00
9	A249001	63MM Ext Htt Tthd Cut W/sleeve	1.0	EA	324.00
10	MJL00126	17/32 Socket 1/2" Drive	1.0	EA	11.09
11	MJL00127	1/2" Square Drive Adapter	1.0	EA	52.06
12	247901	Polypropylene HTT Operator's Manual	1.0	EA	142.00
13	248201	PP Htt Bag W/ Insert	1.0	EA	0.00

Please visit https://fusion.mcelroy.com/parts to purchase parts or for more information.