McElroy Manufacturing, Inc.	DRAWN: BWW	CHECK: SWB	APPRV'D: SWB	DATE: 10/28/05	SHT No: 1	REV No: C	PART No: A866001,03,05,07
The leader by design.	250mm BUTT FUSION MACHINE PACKAGE						
Tulsa, Oklahoma U.S.A.							

NOTE: THIS DRAWING AND THE INFORMATION CONTAINED THEREIN IS THE CONFIDENTIAL AND PROPRIETARY PROPERTY OF McElroy Manufacturing, Inc. THE DRAWING IS NOT TO BE REPRODUCED IN ANY MANNER, SUBMITTED TO OUTSIDE PARTIES FOR EXAMINATION, OR USED DIRECTLY OR INDIRECTLY FOR THE PURPOSES OTHER THAN THOSE FOR WHICH IT WAS FURNISHED WITHOUT WRITTEN PERMISSION OF McElroy Manufacturing, Inc.

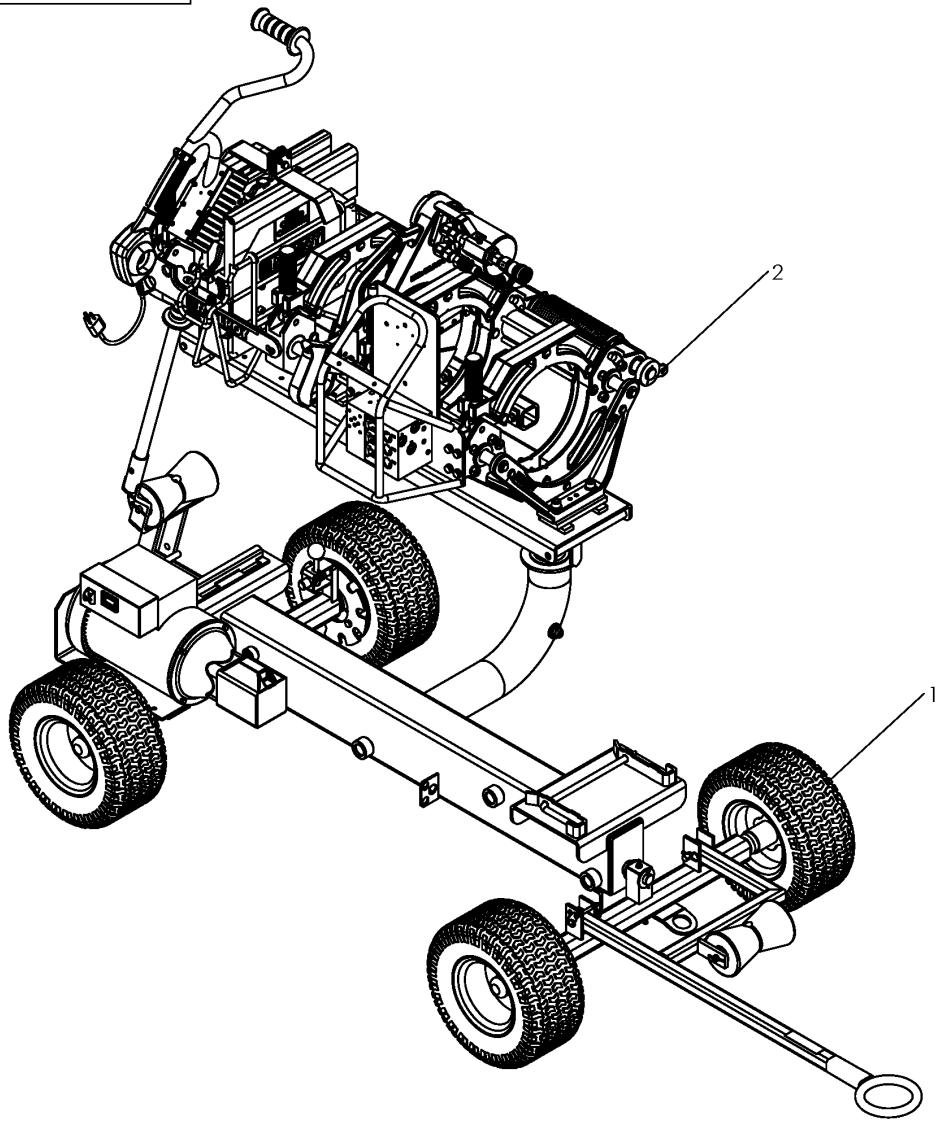

Click Here to View Item Online

McElroy Manufacturing Parts List

Part Number: A866003 250mm LF 220-240v,50Hz,1Ph Butt Fusion Machine Package

Part Number A866003 Component List

Item	Component	Description	Quantity	Unit	Price
1	A860702	250 / 28 220-240V,50Hz,1Ph Rolling Vehicle Package w/ Euro Plug	1.0	EA	8,676.00
2	AT2505503	PitBull 250 LF Butt Fusion Machine Package	1.0	EA	20,488.00

Please visit https://fusion.mcelroy.com/parts to purchase parts or for more information.