McElroy Manufacturing, Inc. The leader by design. Tulsa, Oklahoma U.S.A.	DRAWN: TGW	CHECK: TLW	APPRV'D: SWB	DATE: 11/19/98	SHT No: 6	REV No: K	PART No: 220200

4" HOT TAPPING TOOL ASSEMBLIES

NOTE: THIS DRAWING AND THE INFORMATION CONTAINED THEREIN IS THE CONFIDENTIAL AND PROPRIETARY PROPERTY OF McElroy Manufacturing, Inc. THE DRAWING IS NOT TO BE REPRODUCED IN ANY MANNER, SUBMITTED TO OUTSIDE PARTIES FOR EXAMINATION, OR USED DIRECTLY OR INDIRECTLY FOR THE PURPOSES OTHER THAN THOSE FOR WHICH IT WAS FURNISHED WITHOUT WRITTEN PERMISSION OF McElroy Manufacturing, Inc.

NOTES:
1. ITEM 5 NOT SHOWN.

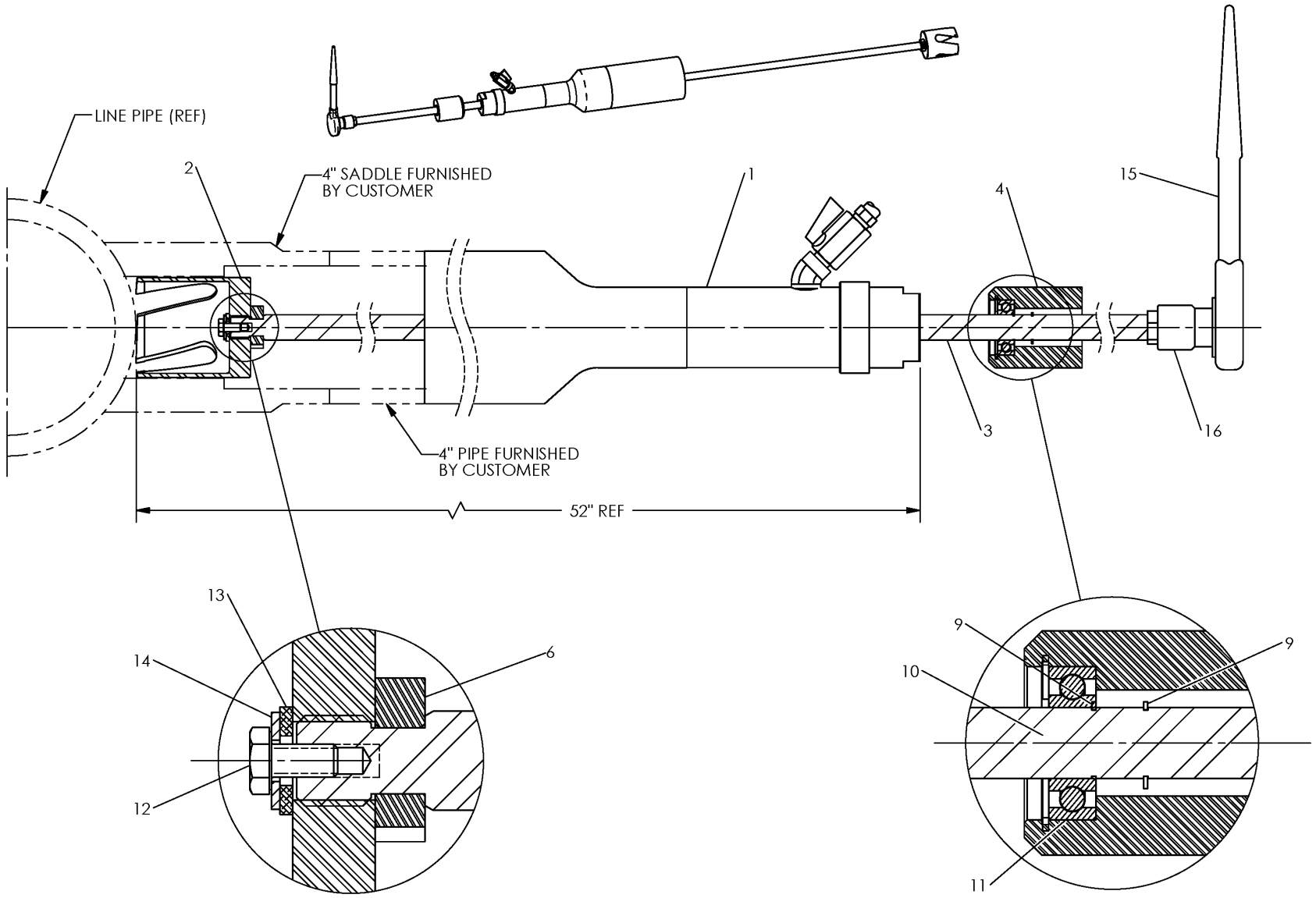

Click Here to View Item Online

McElroy Manufacturing Parts List

Part Number: 220207 4IPS High Density 3408/4710 Hot Tapping Tool Assembly

Part Number 220207 Component List

Item	Component	Description	Quantity	Unit	Price
1	22120507	4IPS High Density 3408/4710 Hot Tapping Tool Gland Fitting Assembly	1.0	EA	1,172.00
2	221702	3-3/8L X 3D Toothed Cutter	1.0	EA	1,183.00
3	221402	4IPS Htt Shaft	1.0	EA	736.00
4	220701	Htt Bearing Housing	1.0	EA	199.00
5	226101	2,3&4 Htt Box W/foam Inserts (Effective 3/4/09 to 1/13/21)	1.0	EA	563.00
5	251601	Htt Box W/foam Inserts	1.0	EA	636.00
6	224101	Collar Mod	1.0	EA	96.95
9	MCB00003	Ext Snap Ring	2.0	EA	0.40
10	MCA00007	1.625 Int Snap Ring	1.0	EA	1.34
11	MDM00028	Ball Bearing	1.0	EA	40.65
12	MAH00091	1/4-20NCX1/2LG Hhcs	1.0	EA	1.08
13	MBG00025	3/8 Thrust Washer	1.0	EA	5.39
14	MBF00005	1/4 TY 'a' Wide FL Wshr Stl PL	1.0	EA	0.11
15	MJL00005	1/2 Drive Ratchet Wrench	1.0	EA	198.00
16	MJL00006	7/8 Socket X 1/2 Drive	1.0	EA	36.47

Please visit https://fusion.mcelroy.com/parts to purchase parts or for more information.