McElroy Manufacturing, Inc. The leader by design. Tulsa, Oklahoma U.S.A.	DRAWN: PJD	CHECK: RSL	APPRV'D: JBC	DATE: 2/3/23	DWG No:	SHT No: 1	REV No: A	PART No: 24P0985655
	EP2800Q SERIES 2 HYDRAULIC SCHEMATIC							CAD No: 24P0985655

NOTE: THIS DRAWING AND THE INFORMATION CONTAINED THEREIN IS THE CONFIDENTIAL AND PROPRIETARY PROPERTY OF McElroy Manufacturing, Inc. THE DRAWING IS NOT TO BE REPRODUCED IN ANY MANNER, SUBMITTED TO OUTSIDE PARTIES FOR EXAMINATION, OR USED DIRECTLY OR INDIRECTLY FOR THE PURPOSES OTHER THAN THOSE FOR WHICH IT WAS FURNISHED WITHOUT WRITTEN PERMISSION OF McElroy Manufacturing, Inc.

Color Legend	
Solid Red= System Pressure Line	
Solid Blue= Return to Tank Pressure Line	
Solid Green= Pump Feed and other Suction Lines	
Long Dashed Orange = Pilot Line	
Short Dashed Green = Drain Line	
Solid Orange = Reduced Pressure Line	

NOTES:

1. FOR ELECTRICAL SCHEMATIC, REFERENCE 24P0983980.
2. FOR HOSES AND FITTINGS, REFERENCE 24P0979908.

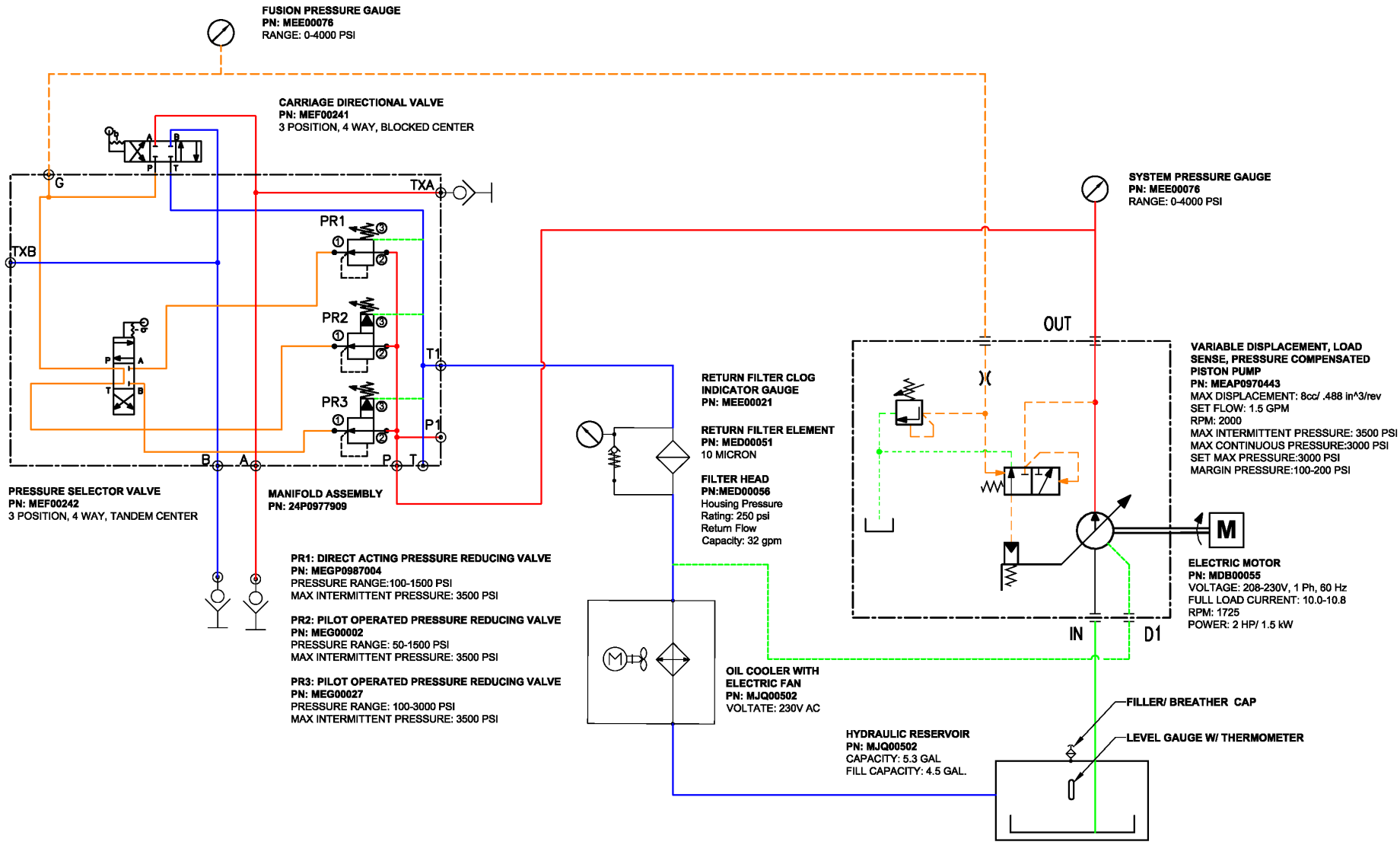

McElroy Manufacturing Parts List

Part Number: 24P0985655 EP2800Q Series 2 Hydraulic Schematic

Please visit https://fusion.mcelroy.com/parts to purchase parts or for more information.